NEC µPD777 to YUV System Design

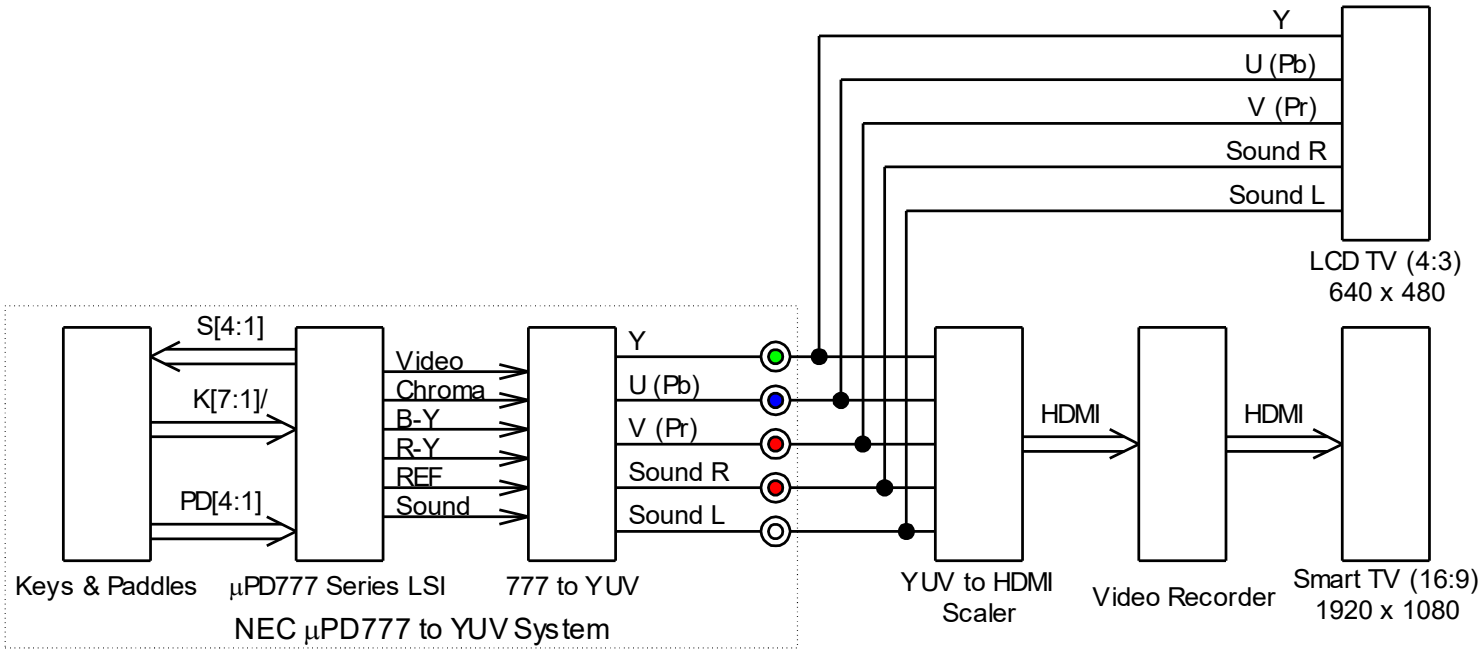

Whole System Diagram

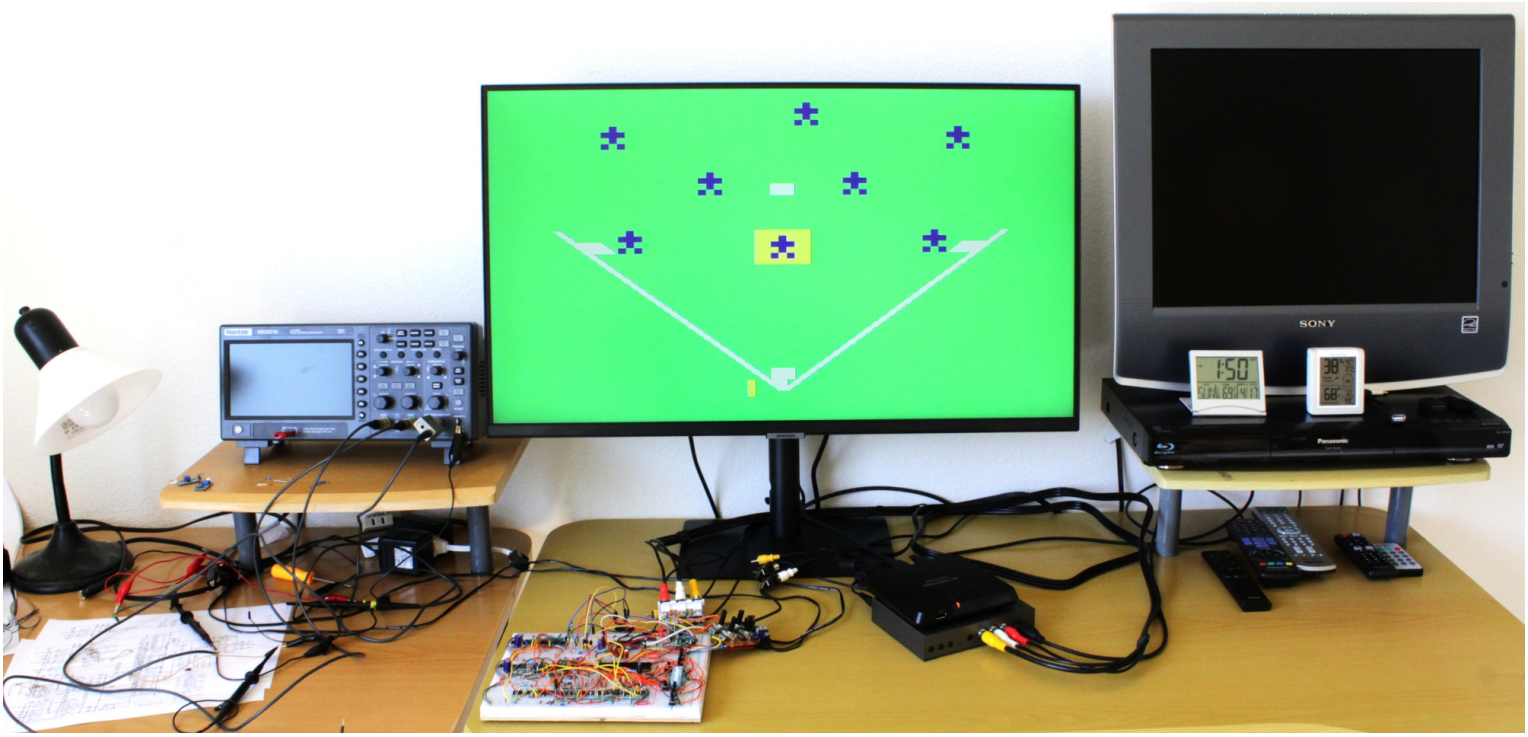

Actual System Panorama (Displaying Start Screen of µPD778 (Baseball))

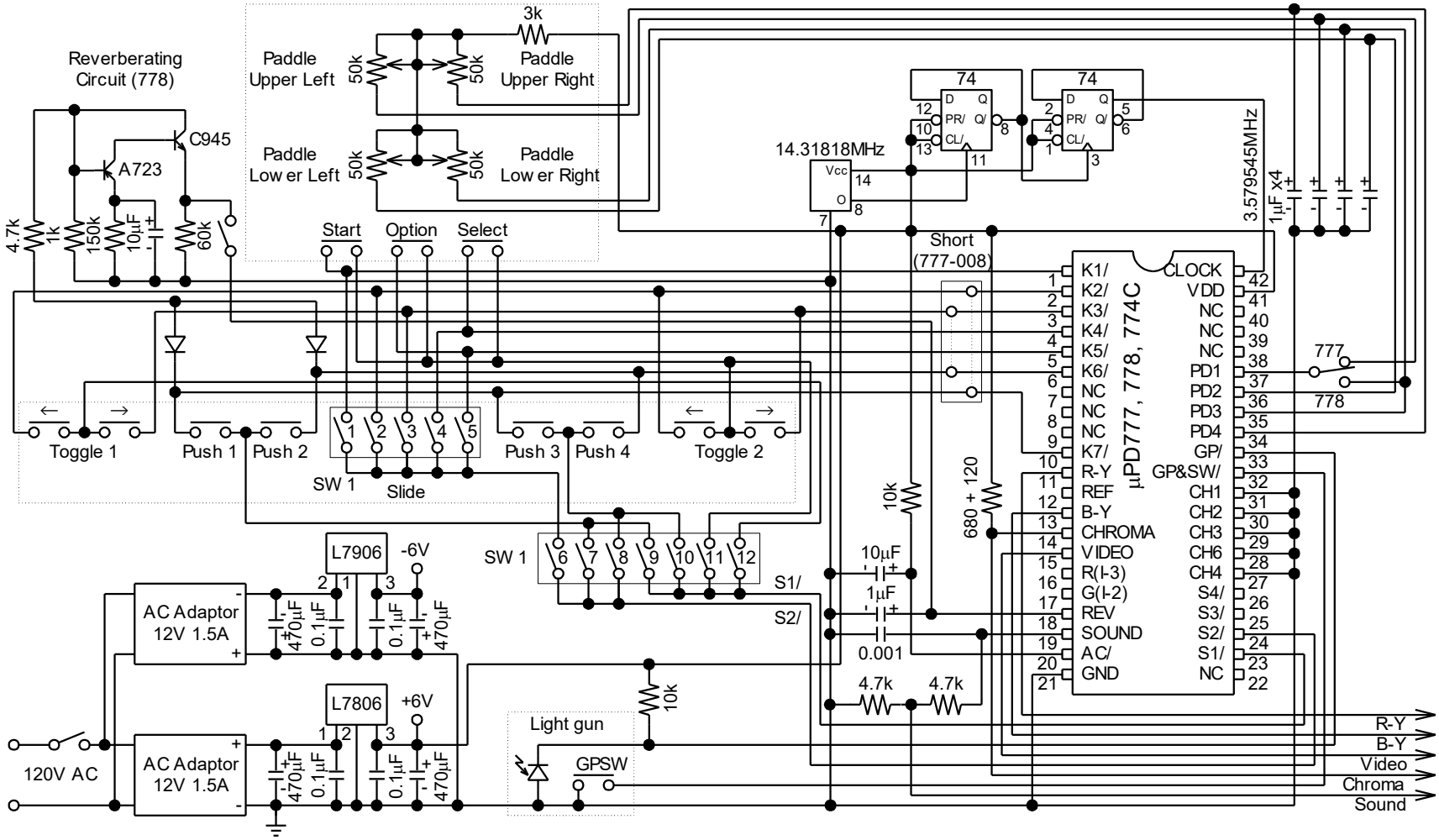

NEC µPD777C
B-Y, R-Y, REF output

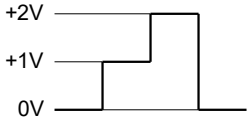

On-chip signals			Output pins		
R	G	B	B-Y	R-Y	REF
1	1	1	0V	+2V	+1V
1	1	0	0V	+1V	
1	0	1	+2V	+2V	
1	0	0	+1V	+2V	
0	1	1	+1V	0V	
0	1	0	0V	0V	
0	0	1	+2V	+1V	
0	0	0	+2V	0V	

NEC µPD777C
Video output

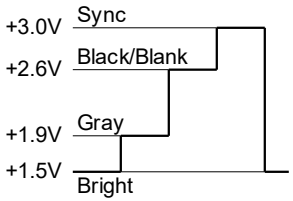

NEC µPD777C
Chroma output

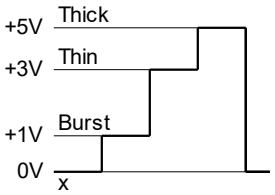

"777 to YUV" System Schematic 1

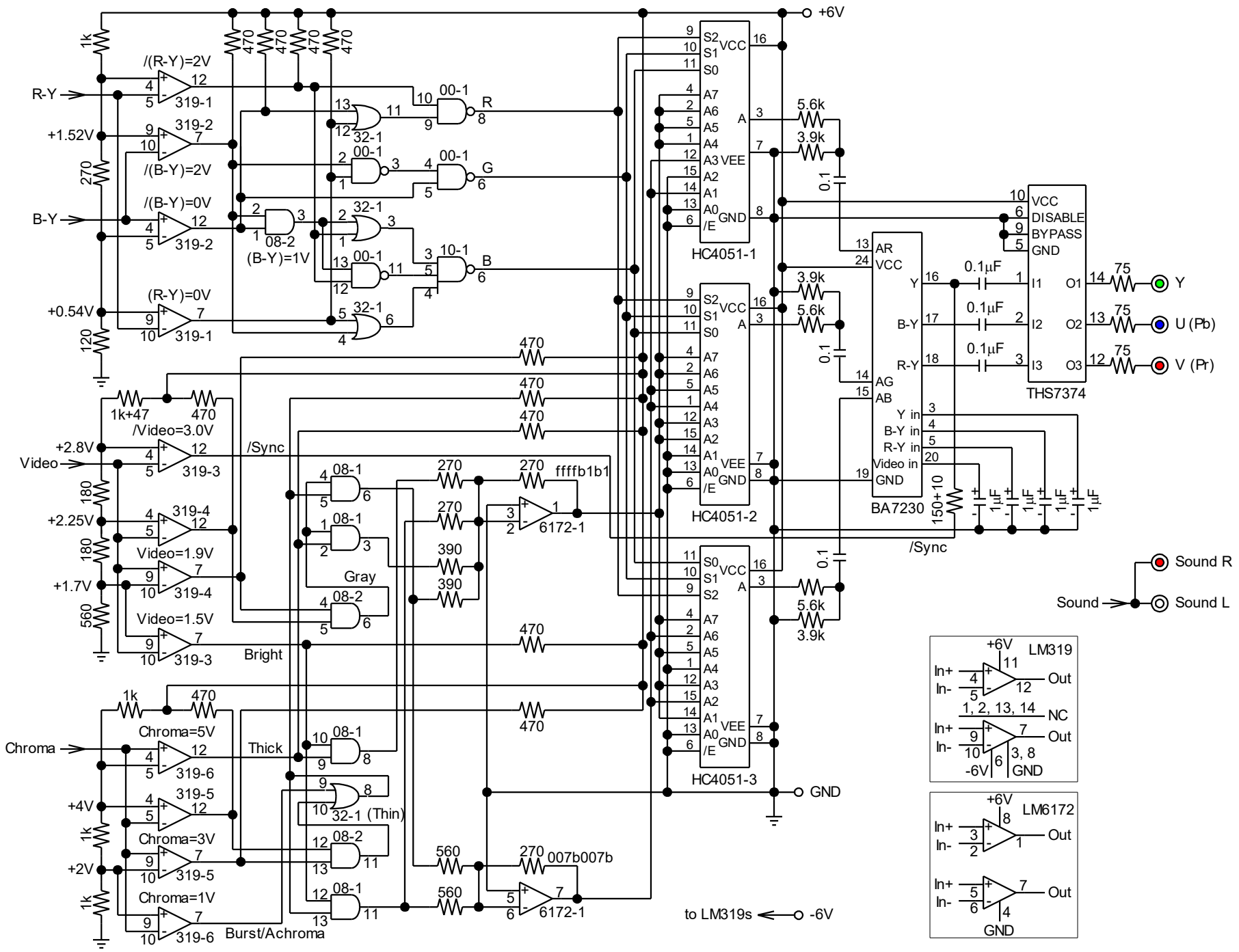

"777 to YUV" System Schematic 2

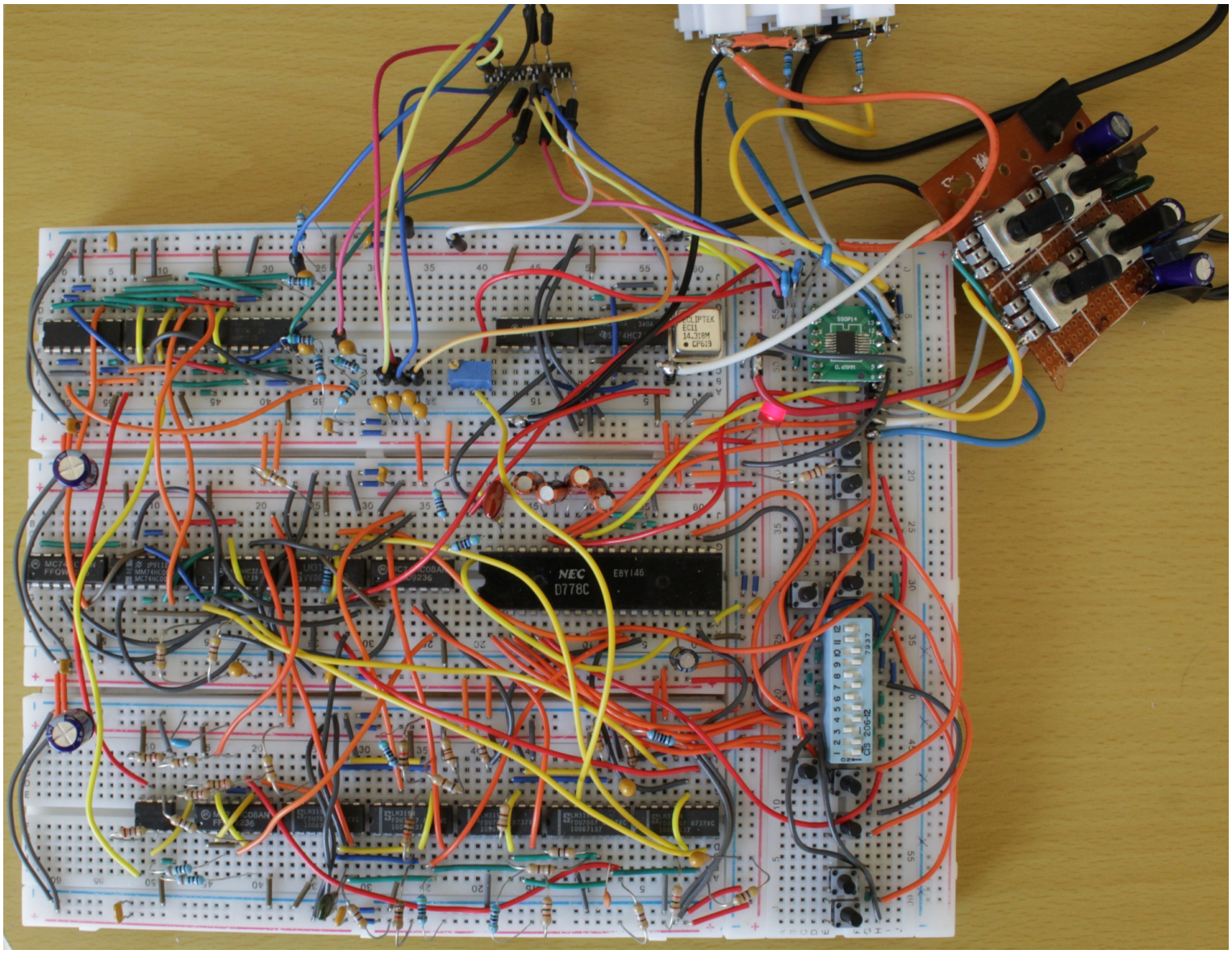

Bread Board

Bill Of Materials (BOM)

Name	Pins	Function	Piece(s)
74HC00	14	Quad 2 input NAND	1
74HC08	14	Quad 2 input AND	2
74HC10	14	Triple 3 input NAND	1
74HC14	14	Hex Schmitt-trigger Inverter	1
74HC32	14	Quad 2 input OR	1
74HC74	14	Dual D-F/F with preset & clear	1
74HC4051	16	8 to 1 Analog Switch	3
LM319	14	Dual Comparator	6
LM6172	8	Dual Video OP Amp	1
BA7230	24	Analog RGB to YUV Convertor	1
THS7374	14	Quad Video Amp with Low Pass Filter	1
Crystal	8	14.31818 MHz Oscillator	1
μPD777	42	Single-chip Video Game Microprocessor	1

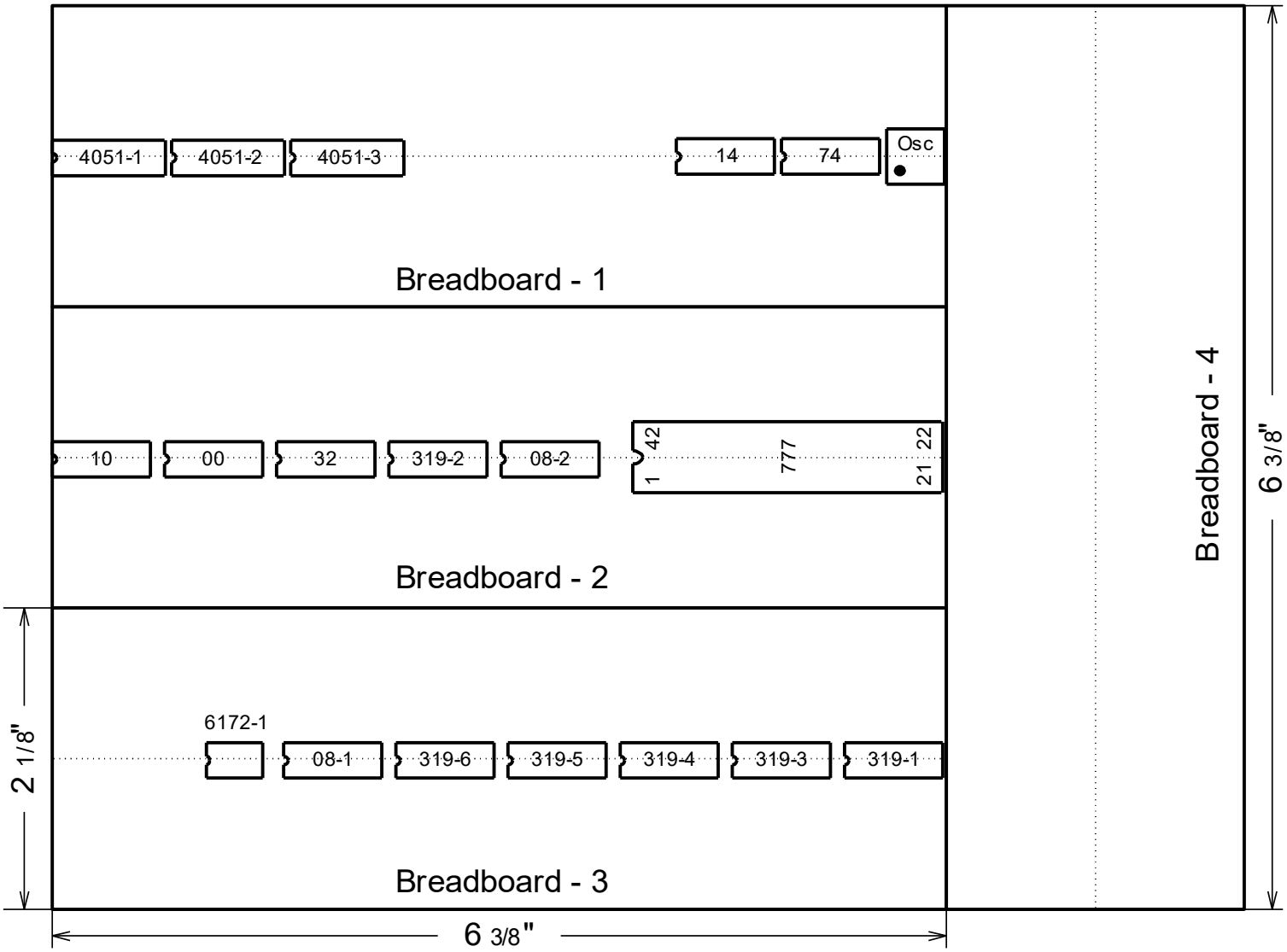

Parts Layout of Bread Board

BA7230

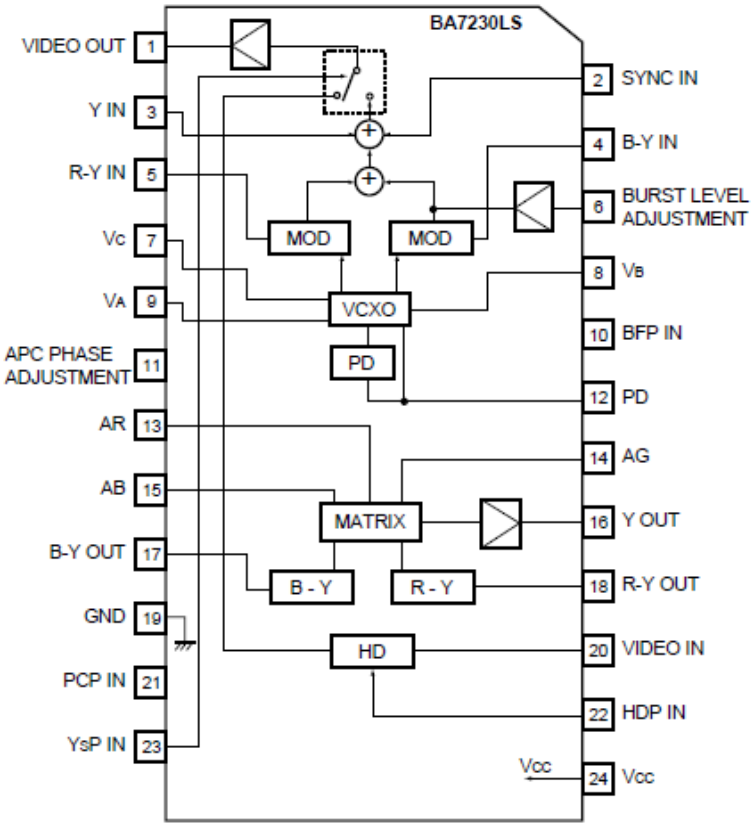

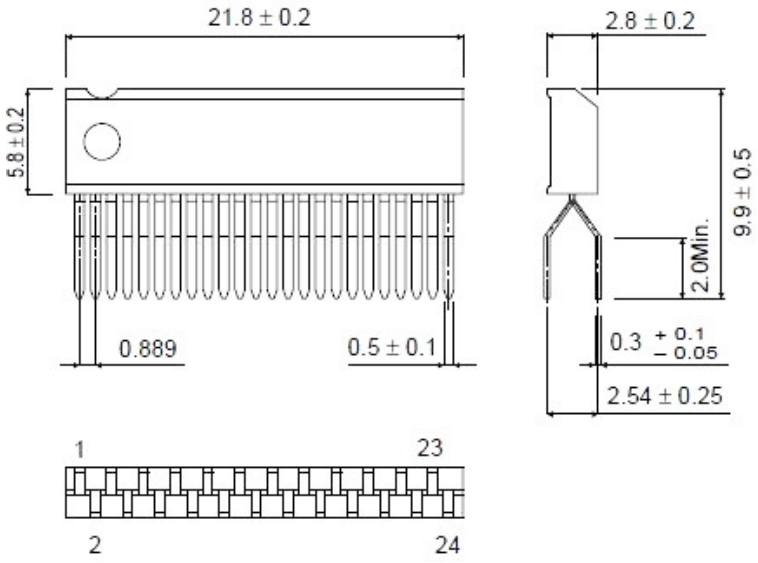

ER-EY output level	V_{R-Y}	0.3	0.42	0.55	V_{P-P}	$V_R = 0.7V_{P-P}$
EB-EY output level	V_{B-Y}	0.2	0.31	0.42	V_{P-P}	$V_B = 0.7V_{P-P}$
YOUT output level	V_Y	1.0	1.4	1.8	V_{P-P}	$V_R = V_G = V_B = 0.7V_{P-P}$

(3) Input pins with pedestal clamps cannot be left open and must be grounded with a low impedance. When not used, ground with a 1µF capacitor.
*Input pins with pedestal clamps:
Y_{IN} (pin 3), B-Y_{IN} (pin 4), R-Y_{IN} (pin 5), VIDEO IN (pin 20)

Because BA7230 is encapsulated in 24 pin SZIP (Small Zig-zag Inline Package) which sockets are not at market, I had to directly solder interconnects to pins.

THS7374 Video Amplifier

FEATURES

- 4-SDTV Video Amplifiers for CVBS, S-Video, $Y'P'_BP'_R$ 480i/576i, Y'U'V', or G'B'R' (R'G'B')
- Integrated Low-Pass Filters:
  - 6th-Order 9.5-MHz (–3 dB) Butterworth
  - –1 dB Passband Bandwidth at 8.2-MHz
  - 54-dB Attenuation at 27-MHz

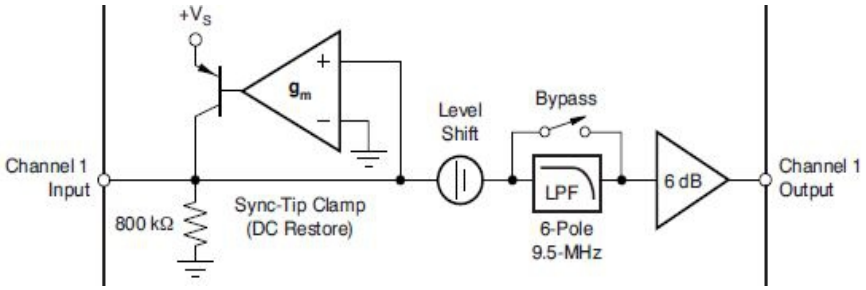

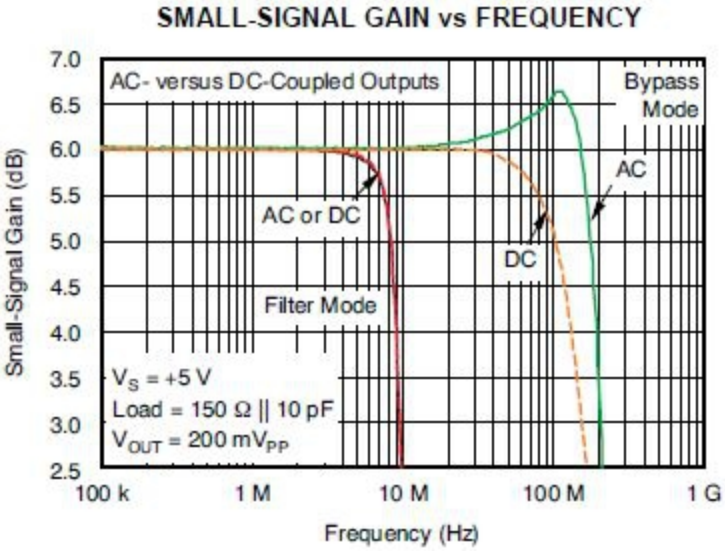

The THS7374 filters have a nominal corner (–3 dB) frequency at 9.5-MHz and a –1 dB passband typically at 8.2-MHz. This 9.5-MHz filter is ideal for standard definition (SD) NTSC, PAL, and SECAM composite video (CVBS) signals. It is also useful for s-video signals (Y'C'), 480i/576i $Y'P'_BP'_R$, Y'U'V', broadcast G'B'R' (R'G'B') signals, and computer video signals.

I tried to apply following two kinds of video amplifier approaches.
(1) Emitter follower by bipolar transistors
(2) Video operational amplifiers
Both ways above generated intensive noise on all three component video outputs.

The Butterworth low pass filter implemented on THS7374 reduced high frequency noise effectively. Amazing!

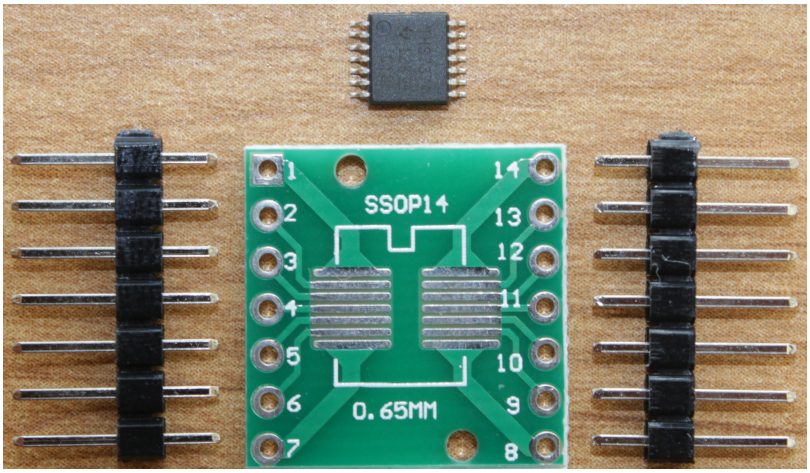

SSOP (Shrink Small Outline Package) to
DIP (Dual Inline Package) Conversion Board

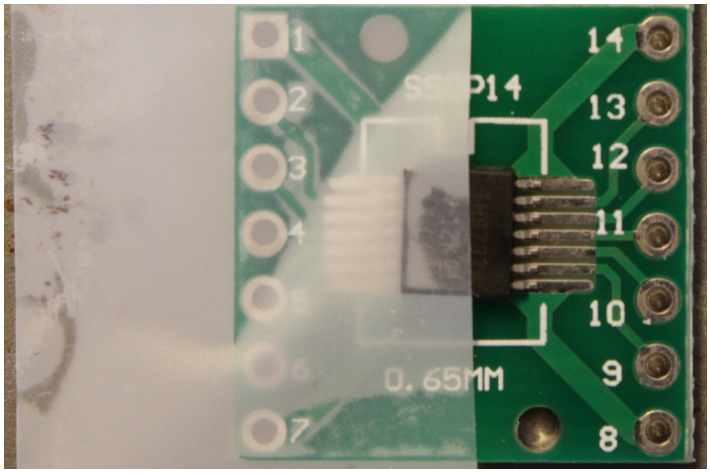

Temporary positioning by tape before solder

I successfully soldered a THS7374 encapsulated in 14 pin SSOP (Shrink Small Outline Package; 5mm x 4.4mm physical size similar to silicon die size) on the SSOP to DIP (Dual Inline Package) conversion board above.
It was for the first time in my long life. My world is expanding...

LM319 Comparator

TEXAS INSTRUMENTS

LM119, LM219, LM319

SNOSBJ2B – AUGUST 2000 – REVISED JANUARY 2016

LMx19 High Speed Dual Comparator

1 Features

- Two Independent Comparators
- Operates from a Single 5-V Supply
- Typically 80-ns Response Time at ±15 V
- Minimum Fan-out of 2 Each Side
- Maximum Input Current of 1 μA Over Temperature
- Inputs and Outputs can be Isolated from System Ground
- High Common-Mode Slew Rate

2 Description

The LM119 series are precision high-speed dual comparators fabricated on a single monolithic chip. They are designed to operate over a wide range of supply voltages down to a single 5-V logic supply and ground. They have higher gain and lower input currents than devices such as the LM710. The uncommitted collector of the output stage makes the LM119 compatible with RTL, DTL, and TTL, as well as capable of driving lamps and relays at currents of up to 25 mA.

The LM319A offers improved precision over the

LM319 is claiming a single 5V power supply operation above.
However, the AC specification below significantly limits the operational range.

5.5 Electrical Characteristics LM319, LM319A

These specifications apply for V_S = ±15 V, and 0°C ≤ T_A ≤ 70°C, unless otherwise stated. The offset voltage, offset current, and bias current specifications apply for any supply voltage from a single 5-V supply up to ±15-V supplies. Do not operate the device with more than 16 V from ground to V_S.

PARAMETER	TEST CONDITIONS	LM319A			LM319			UNIT
		MIN	TYP	MAX	MIN	TYP	MAX	
Input Offset Voltage(1)	T_A = 25°C, RS ≤ 5k		0.5	1		2	8	mV
Input Offset Current(1)	T_A = 25°C		20	40		80	200	nA
Input Bias Current	T_A = 25°C		150	500		250	1000	nA
Voltage Gain	T_A = 25°C(2)	20	40		8	40		V/mV
Response Time(3)	T_A = 25°C, V_S = ±15 V		80			80		ns
Saturation Voltage	V_{IN} ≤ −10 mV, I_{OUT} = 25 mA T_A = 25°C		0.75	1.5		0.75	1.5	V
Output Leakage Current	V_{IN} ≥ 10 mV, V_{OUT} = 35 V V^- = V_{GND} = 0 V, T_A = 25°C		0.2	10		0.2	10	μA
Input Offset Voltage(1)	R_S ≤ 5k			10			10	mV
Input Offset Current(1)				300			300	nA
Input Bias Current				1000			1200	nA
Input Voltage Range	V_S = ±15 V		±13			±13		V
	V^+ = 5 V, V^- = 0	1		3	1		3	
Saturation Voltage	V^+ ≥ 4.5 V, V^- = 0 V_{IN} ≤ −10 mV, I_{SINK} ≤ 3.2 mA		0.3	0.4		0.3	0.4	V
Differential Input Voltage				±5			±5	V
Positive Supply Current	T_A = 25°C, V^+ = 5 V, V^- = 0		4.3			4.3		mA
Positive Supply Current	T_A = 25°C, V_S = ±15 V		8	12.5		8	12.5	mA
Negative Supply Current	T_A = 25°C, V_S = ±15 V		3	5		3	5	mA

There are very less applications that allow such narrow input voltage range (1V to 3V). Single 5V never works.

Conclusion I eventually reached was to prepare dual power supplies (+5V, -5V, and Ground) all the time when designing analog systems mixing with operational amplifiers, comparators, and digital logic. Analog signals do not rely on Ground same as differential signaling now commonly used on digital systems to speed reducing noise and radio wave emission.

LM319 was a good try for such mixed signal system because it assigned additional digital ground pin (GND) for open-collector output buffer.

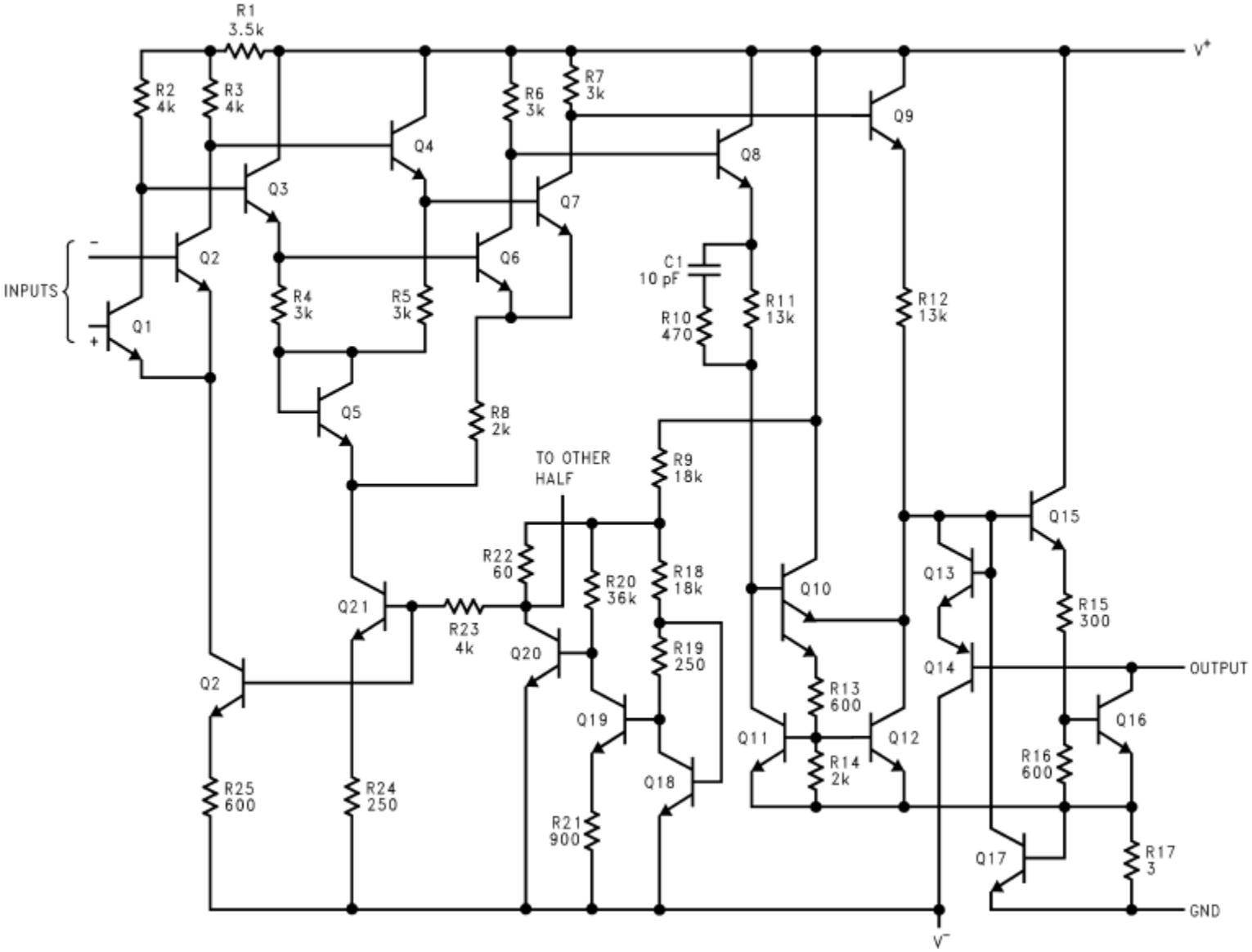

Video & Chroma

(1) μPD777 Shipped

Period	Objects	Video NEC μPD777C Video output				Chroma NEC μPD777C Chroma output			Color
		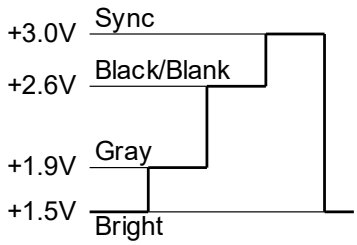				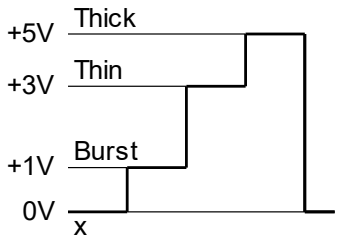			
		Sync +3.0V	Black/Blank +2.6V	Gray +1.9V	Bright +1.5V	Thick +5.0V	Thin +3.0V	Burst/Achroma +1.0V	
Display	Foreground	---	Black	0	1	1	0	0	Any
						~~0~~	~~1~~	~~0~~	~~Any~~
						0	0	1	White/Gray
	Background			1	0	1	0	0	Any
						~~0~~	~~1~~	~~0~~	~~Any~~
						0	0	1	White/Gray
HBlank	Color burst	Sync	Blank	1	0	0	1	0	Yellow

"Thin" level was not assigned to foreground and background objects.
"Thin" level instead of "Burst/Acroma" level had been assigned to "Color burst" timing.

(2) μPD777 Target Spec

Period	Objects	Video NEC μPD777C Video output				Chroma NEC μPD777C Chroma output			Color
		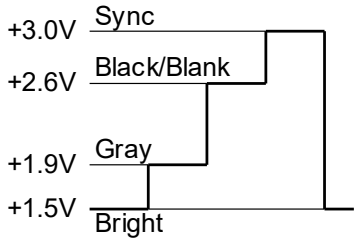				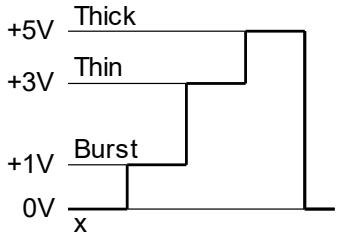			
		Sync +3.0V	Black/Blank +2.6V	Gray +1.9V	Bright +1.5V	Thick +5.0V	Thin +3.0V	Burst/Achroma +1.0V	
Display	Foreground	---	Black	0	1	1	0	0	Any
						0	1	0	Any
						0	0	1	White/Gray
	Background			1	0	1	0	0	Any
						0	1	0	Any
						0	0	1	White/Gray
HBlank	Color burst	Sync	Blank	1	0	0	0	1	Yellow

100MHz Digital Sampling Oscilloscope <1G samplings/sec>
(Hantek DSO2C10)

LCD TV with YUV <Aspect ratio 4:3>
(Sony WEGA KLV-S20G10)

Hantek DSO2C10 is a revolutionary digital sampling oscilloscope with various features. Screen shots can be stored on USB flash memory under 16GB capacity formatted by FAT32 file allocation table as well.

YUV (Component) video output from "777 to YUV" bread board was successfully got displayed on an old-age Sony WEGA LCD TV with direct YUV cable connection without using a scaler.

There is a good chemistry between Retros, NEC μPD777 & Sony WEGA.

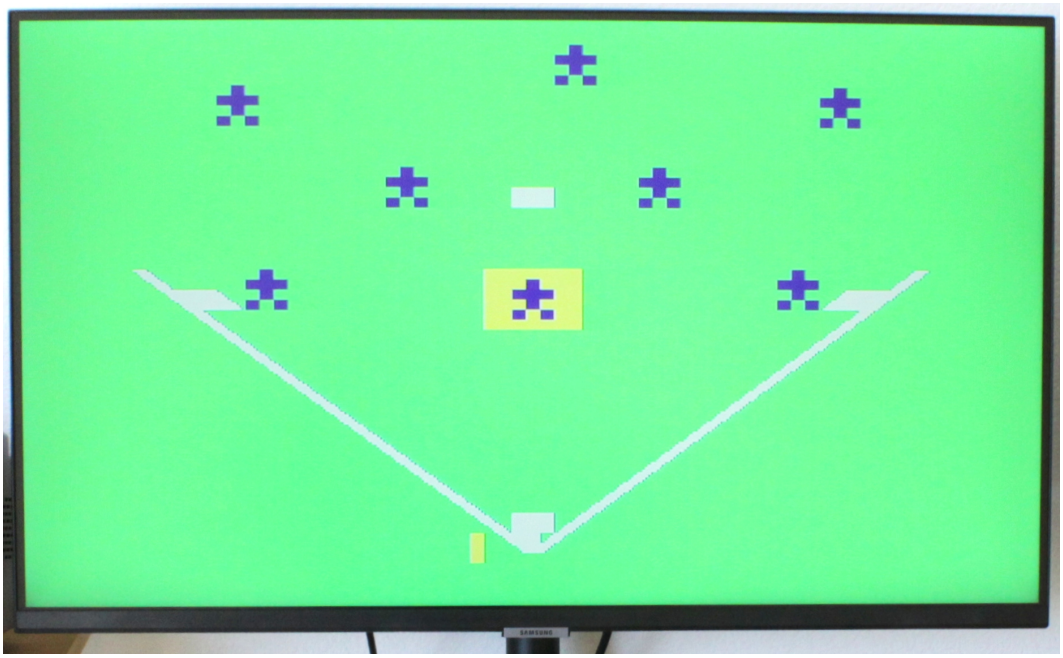

Latest Smart TV with HDMI <Aspect ratio 16:9>
(Samsung S32AM50)

Scaler (Gofanco PRO-Scaler2HD)
HDMI Video Recorder
(AverMedia EzRecorder 130)

I tested three YUV (Component video) to HDMI scalers. "Gofanco PRO-Scaler2HD" made in Taiwan was a sole scaler worked beautifully under "480i" to "1080i" scaling. Other two scalers made in China did not work for "480i" NTSC conformed video that μPD777 outputs.

There was none made in Japan reflecting "Changing The World", Chips & Technologies' slogan. As well as in semiconductor industry, Taiwanese TSMC (Taiwan Semiconductor Manufacturing Company) and UMC (United Microelectronics Corporation) clearly outdistanced NEC Japan. Past "Rising sun, Japan" had turned into "Waning moon, Japan" in last three decades. "Peace-addicted fools' paradise, Japan" is hopeless, any more.

Color Bars vs YUV (Y,PB,PR) Signal Levels
(1) Theory

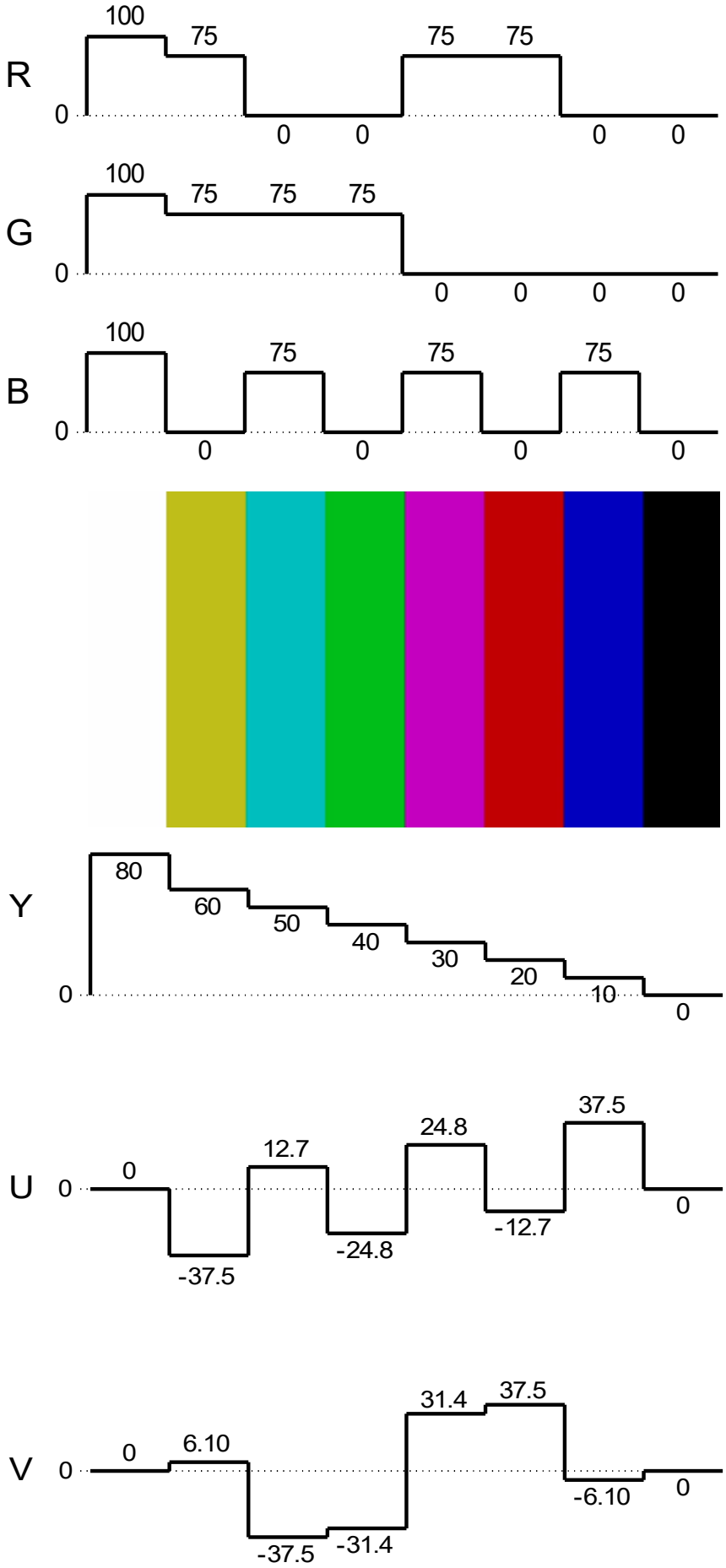

(2) Actual example (Observing YUV signal levels generated by Panasonic DVD player)

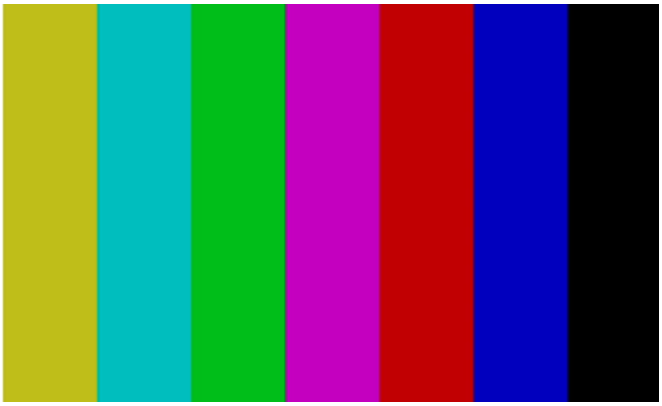

Y

U

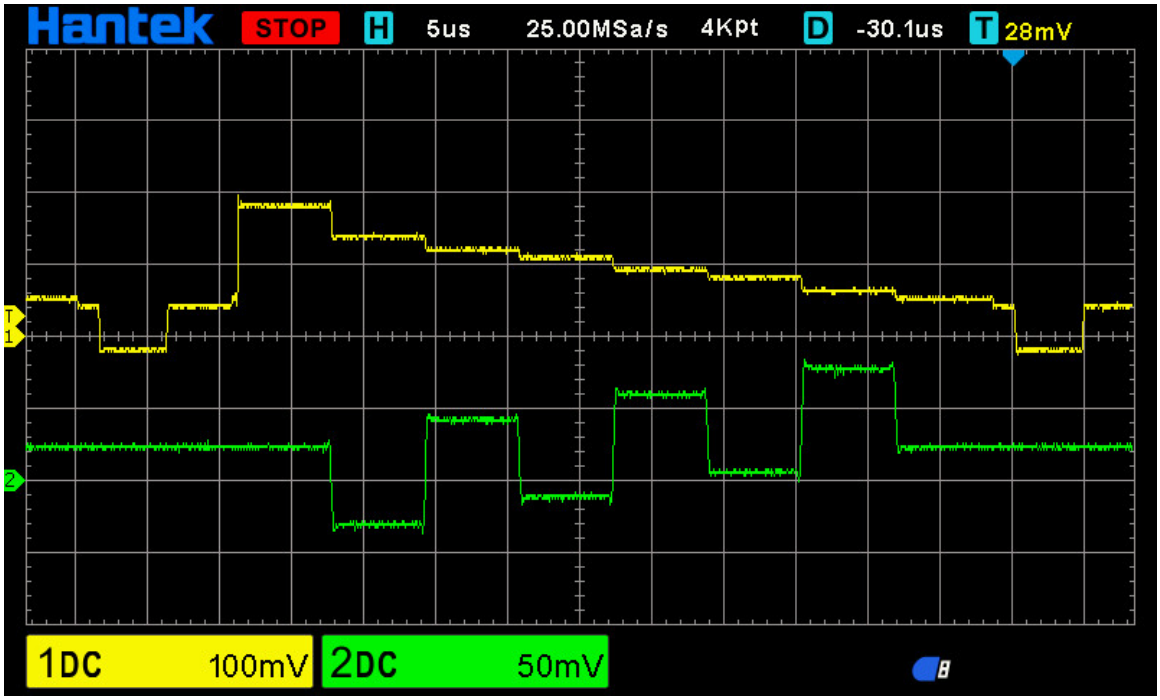

Y

V

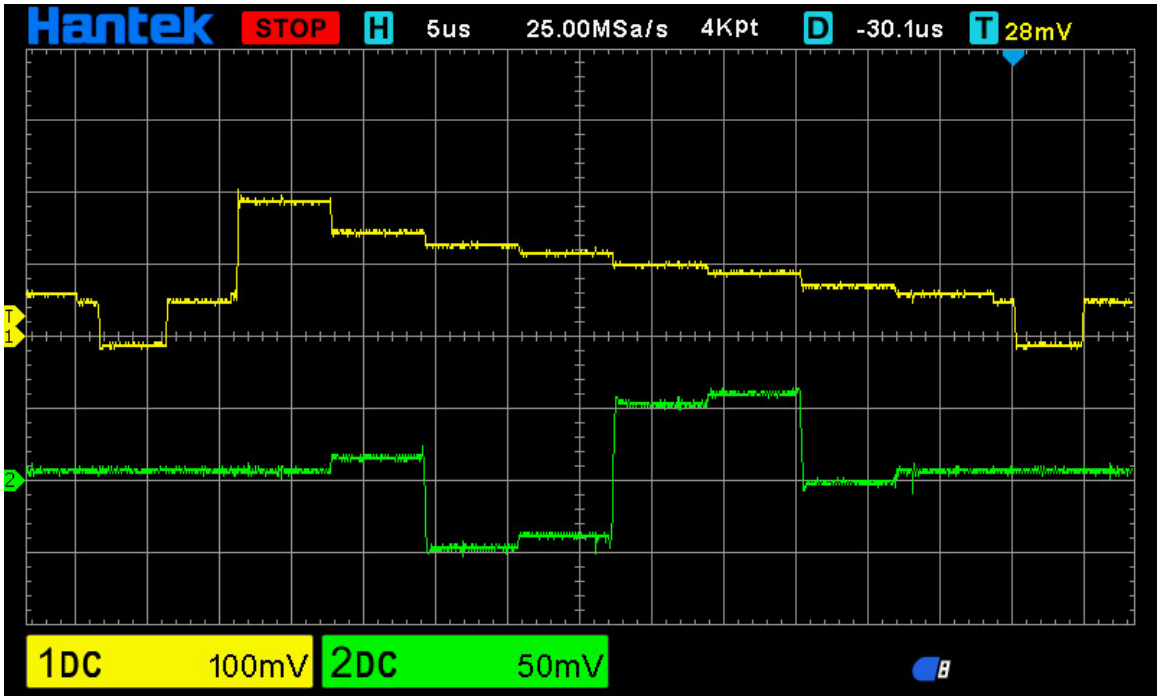

(3) "777 to YUV" System (Not a color bars)

U

Y

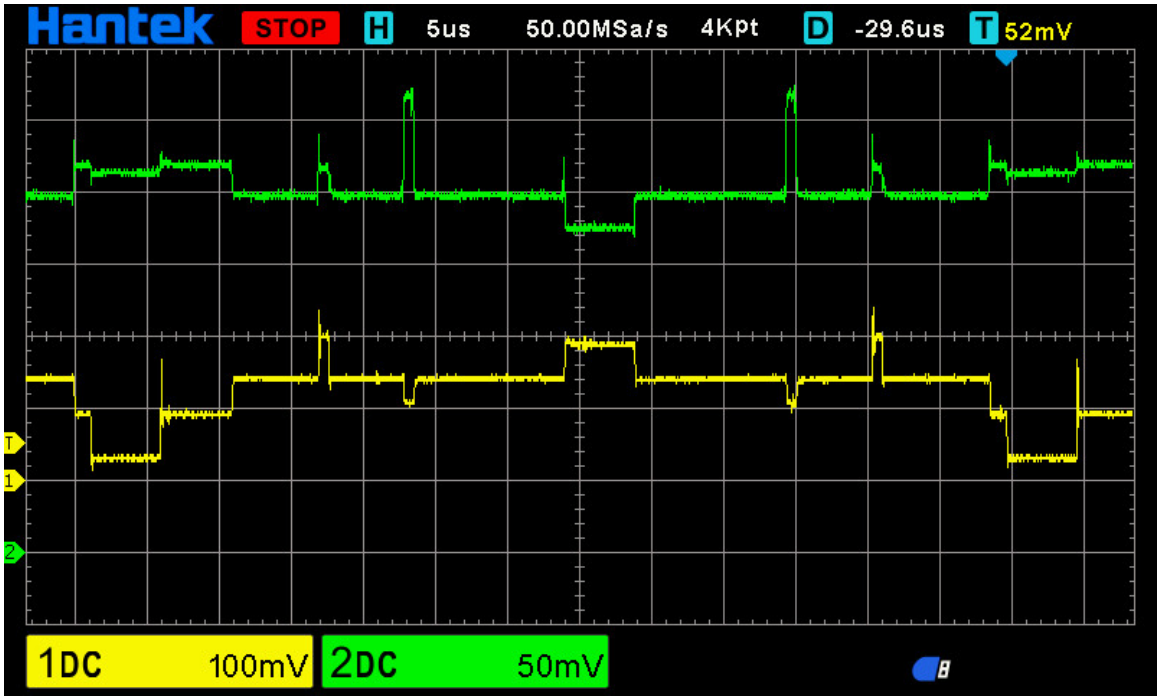

V

Y

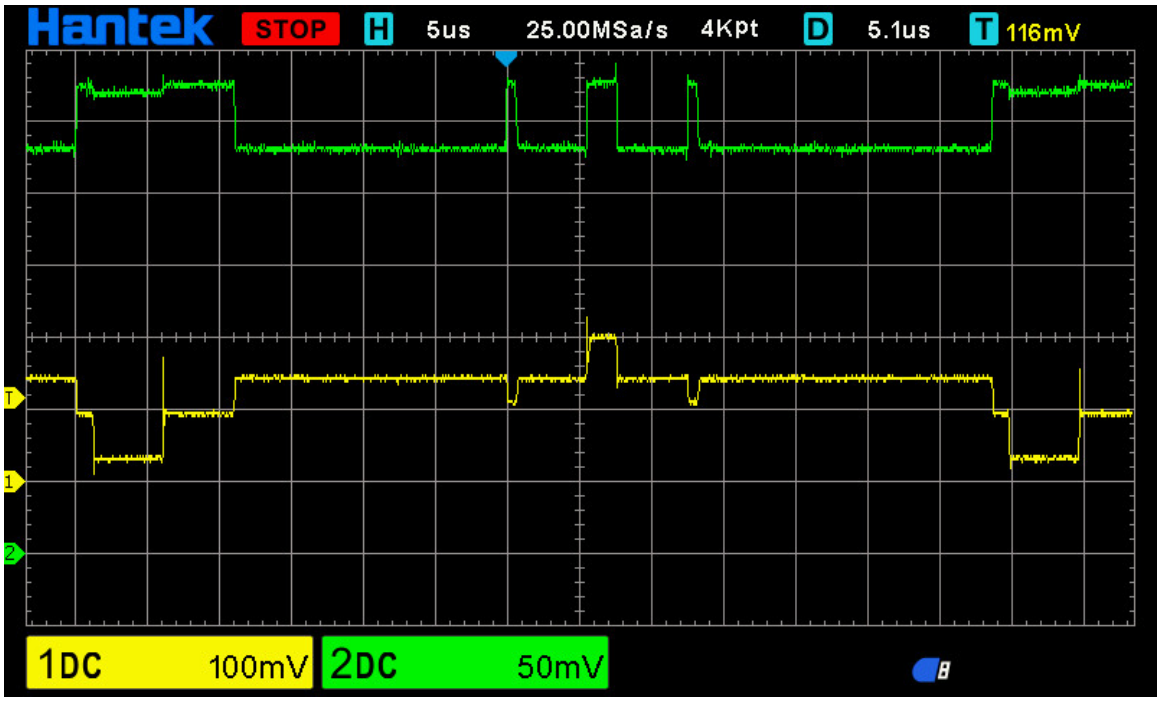

Video Operational Amplifier & Comparator

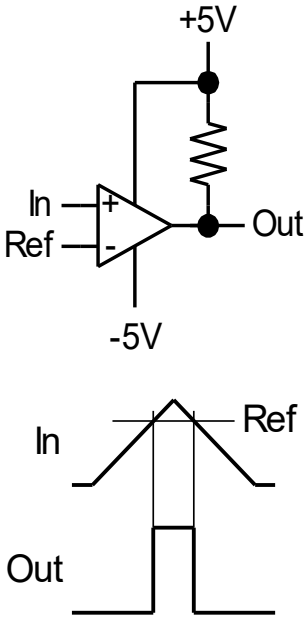

Non-inverting Comparator

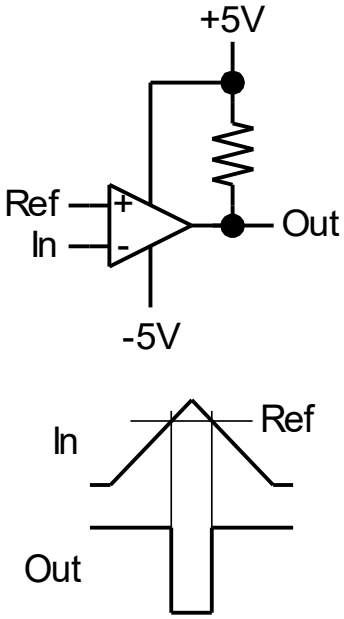

Inverting Comparator

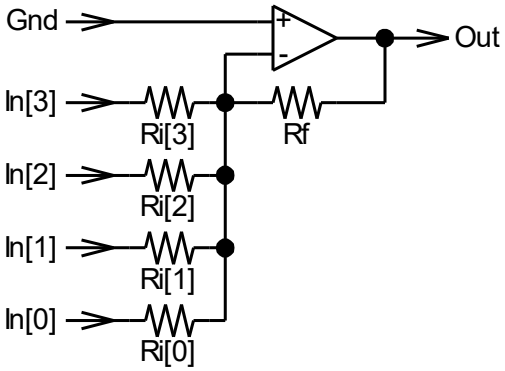

Digital to Analog Converter

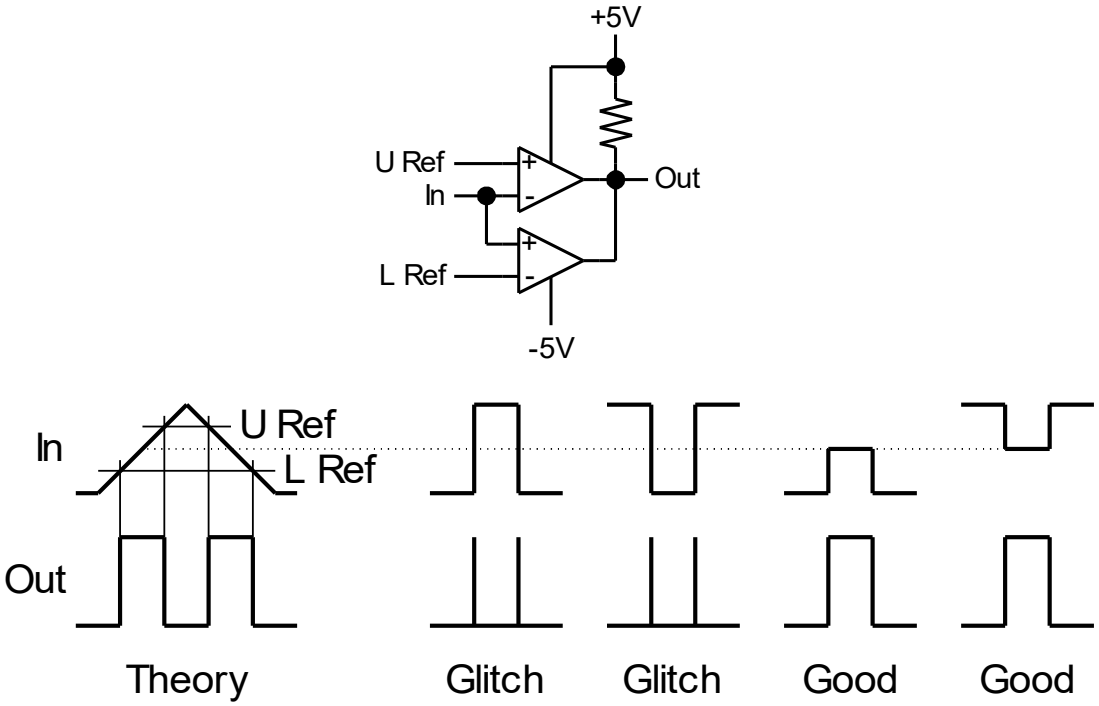

Window Comparator

In case that input signal level fully swings, the window comparator makes large glitch when passing transient region. The window comparator can work theoretically but it is not applicable in real world.

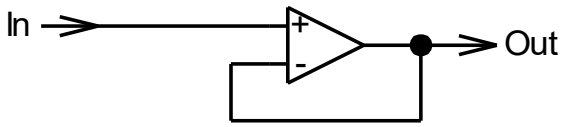

Voltage follower (Unity gain buffer) for impedance matching or circuit isolation

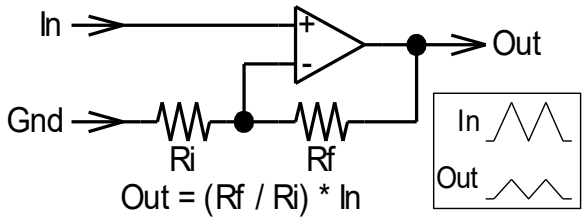

Non-Inverting Amp
(if (Rf = Ri), non-inverting buffer)

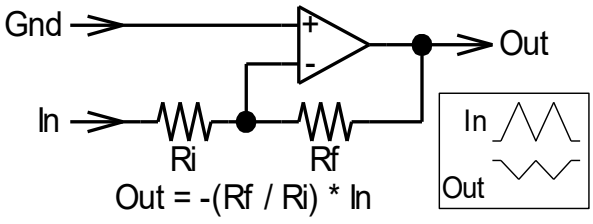

Inverting Amp ("-" means 180° phase shift)
(if (Rf = Ri), inverting buffer)

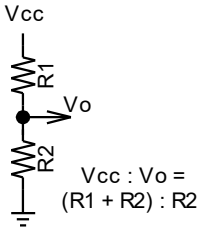

Resistor Division

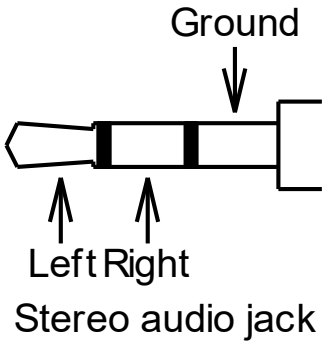

Stereo audio jack

"Gofanco PRO-Scaler2HD" scaler requires audio input through regular audio jack shown above.

Scaling video signal through various AV (Audio & Video) interfaces such as HDMI (High Definition Multimedia Interface), DisplayPort, VGA (D-Sub), Component video (YUV / YpbPr), and Composite video (CVBS) is supported. HDMI and DisplayPort combine the audio and video signals in one cable but VGA, Component, and Composite video do not. In case of Component and Composite video interfaces, RCA to stereo audio jack conversion is required.

The scaler does not support S-Video (YC) and DVI (Digital Visual Interface).

µPD777 Color Map (with Hue Based Color Arrangement)

RGB (1 bit each)	µPD777 Attributes				Level (ffh - 00h)						Y	U	V	Actual color
	Video		Chroma		Dec			Hex						
	Bright	Gray	Thick	Thin	R	G	B	R	G	B				
100	1	0	1	0	255	0	0	ff	00	00	0.30	-0.15	0.62	
			0	1	255	123	0	ff	7b	00	0.58	-0.29	0.37	
	0	1	1	0	177	0	0	b1	00	00	0.21	-0.10	0.43	
			0	1	177	123	0	b1	7b	00	0.49	-0.24	0.18	
110	1	0	1	0	255	255	0	ff	ff	00	0.89	-0.44	0.10	
			0	1	255	255	123	ff	ff	7b	0.94	-0.23	0.05	
	0	1	1	0	177	177	0	b1	b1	00	0.61	-0.30	0.07	
			0	1	177	177	123	b1	b1	7b	0.67	-0.09	0.02	
010	1	0	1	0	0	255	0	00	ff	00	0.59	-0.29	-0.52	
			0	1	0	255	123	00	ff	7b	0.64	-0.08	-0.56	
	0	1	1	0	0	177	0	00	b1	00	0.41	-0.20	-0.36	
			0	1	0	177	123	00	b1	7b	0.46	0.01	-0.41	
011	1	0	1	0	0	255	255	00	ff	ff	0.70	0.15	-0.62	
			0	1	123	255	255	7b	ff	ff	0.85	0.08	-0.32	
	0	1	1	0	0	177	177	00	b1	b1	0.49	0.10	-0.43	
			0	1	123	177	177	7b	b1	b1	0.63	0.03	-0.13	
001	1	0	1	0	0	0	255	00	00	ff	0.11	0.44	-0.10	
			0	1	123	0	255	7b	00	ff	0.26	0.37	0.20	
	0	1	1	0	0	0	177	00	00	b1	0.08	0.30	-0.07	
			0	1	123	0	177	7b	00	b1	0.22	0.23	0.23	
101	1	0	1	0	255	0	255	ff	00	ff	0.41	0.29	0.52	
			0	1	255	123	255	ff	7b	ff	0.70	0.15	0.27	
	0	1	1	0	177	0	177	b1	00	b1	0.29	0.20	0.36	
			0	1	177	123	177	b1	7b	b1	0.57	0.06	0.11	
111	1	0	1	0	255	255	255	ff	ff	ff	1.00	0.00	0.00	
			0	1	255	255	255	ff	ff	ff	1.00	0.00	0.00	
	0	1	1	0	177	177	177	b1	b1	b1	0.69	0.00	0.00	
			0	1	177	177	177	b1	b1	b1	0.69	0.00	0.00	
000	1	0	1	0	0	0	0	00	00	00	0.00	0.00	0.00	
			0	1	0	0	0	00	00	00	0.00	0.00	0.00	
	0	1	1	0	0	0	0	00	00	00	0.00	0.00	0.00	
			0	1	0	0	0	00	00	00	0.00	0.00	0.00	

	Video		Chroma	
	Bright	Gray	Thick	Thin
Foreground (Objects)	1	0	1	0
			0	1
Background	0	1	1	0
			0	1

Thin level was not utilized on µPD777s shipped.

DA Convertor Resistor Map

Attribute Combination	Level		DA Converter			
	Hex	Decimal	Rin		Rload	Schematic
Brightness & Thick	ff	255	Ri[3]	270 Ω	Rf 270 Ω	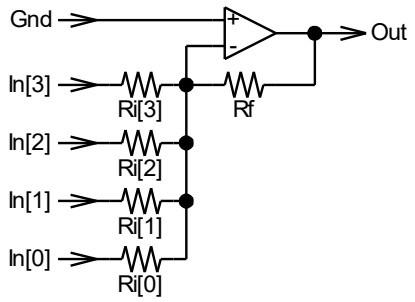
Brightness & Thin	ff	255	Ri[2]	270 Ω		
Gray & Thick	b1	177	Ri[1]	390 Ω		
Gray & Thin	b1	177	Ri[0]	390 Ω		
Brightness & Thick	00	0	Ri[3]	open	Rf 270 Ω	
Brightness & Thin	7b	123	Ri[2]	560 Ω		
Gray & Thick	00	0	Ri[1]	open		
Gray & Thin	7b	123	Ri[0]	560 Ω		

RGB to YUV conversion table ("yuv.log" contents)

```
004
0.299000  -0.147000   0.615000
0.582141  -0.286400   0.366588
0.207541  -0.102035   0.426882
0.490682  -0.241435   0.178471
006
0.886000  -0.436000   0.100000
0.940988  -0.225694   0.051765
0.614988  -0.302635   0.069412
0.669976  -0.092329   0.021176
002
0.587000  -0.289000  -0.515000
0.641988  -0.078694  -0.563235
0.407447  -0.200600  -0.357471
0.462435   0.009706  -0.405706
003
0.701000   0.147000  -0.615000
0.845224   0.076094  -0.318353
0.486576   0.102035  -0.426882
0.630800   0.031129  -0.130235
001
0.114000   0.436000  -0.100000
0.258224   0.365094   0.196647
0.079129   0.302635  -0.069412
0.223353   0.231729   0.227235
005
0.413000   0.289000   0.515000
0.696141   0.149600   0.266588
0.286671   0.200600   0.357471
0.569812   0.061200   0.109059
007
1.000000   0.000000  -0.000000
1.000000   0.000000  -0.000000
0.694118   0.000000   0.000000
0.694118   0.000000   0.000000
000
0.000000   0.000000   0.000000
0.000000   0.000000   0.000000
0.000000   0.000000   0.000000
0.000000   0.000000   0.000000
```

C Source Code of “RGB to YUV.cpp”

```
/*****************************************************************************

Program name:   RGB to YUV
Module name:    RGB to YUV.cpp
Description:    The program calculates signal level from 4 bit RGB to YUV.
                Output files :
                 "yuv.log" YUV calculation result text file
Usage:          RGB to YUV <enter>
Version:        1.0
Date:           April 19, 2022
Programmer:     Tetsuji Oguchi
(C) Oguchi R&D  2022
*****************************************************************************/

#include   <stdio.h>
#include   <string.h>
#include   <process.h>

static char    outfile[] = "yuv.log";
static double  level[16] = {0.00, 0.06, 0.13, 0.19, 0.28, 0.34, 0.40, 0.47,
                            0.53, 0.60, 0.66, 0.72, 0.81, 0.87, 0.94, 1.00};
static int     attrib, rgb, r, g, b;
static int     i, j, ii;
static double  rr[32] =  {0xff, 0xff, 0xff, 0xff, 0xff, 0xc0, 0x80, 0x40,
                          0x00, 0x00, 0x00, 0x00, 0x00, 0x00, 0x00, 0x00,
                          0x00, 0x40, 0x80, 0xc0, 0xff, 0xff, 0xff, 0xff,
                          0xff, 0xc0, 0x80, 0x40, 0x00, 0x00, 0x00, 0x00};
static double  gg[32] =  {0x00, 0x40, 0x80, 0xc0, 0xff, 0xff, 0xff, 0xff,
                          0xff, 0xff, 0xff, 0xff, 0xff, 0xc0, 0x80, 0x40,
                          0x00, 0x00, 0x00, 0x00, 0x00, 0x00, 0x00, 0x00,
                          0xff, 0xc0, 0x80, 0x40, 0x00, 0x00, 0x00, 0x00};
static double  bb[32] =  {0x00, 0x00, 0x00, 0x00, 0x00, 0x00, 0x00, 0x00,
                          0x00, 0x40, 0x80, 0xc0, 0xff, 0xff, 0xff, 0xff,
                          0xff, 0xff, 0xff, 0xff, 0xff, 0xc0, 0x80, 0x40,
                          0xff, 0xc0, 0x80, 0x40, 0x00, 0x00, 0x00, 0x00};
static double  rrr[32] = {0xff, 0xff, 0xb1, 0xb1, 0xff, 0xff, 0xb1, 0xb1,
                          0x00, 0x00, 0x00, 0x00, 0x00, 0x7b, 0x00, 0x7b,
                          0x00, 0x7b, 0x00, 0x7b, 0xff, 0xff, 0xb1, 0xb1,
                          0xff, 0xff, 0xb1, 0xb1, 0x00, 0x00, 0x00, 0x00};
static double  ggg[32] = {0x00, 0x7b, 0x00, 0x7b, 0xff, 0xff, 0xb1, 0xb1,
                          0xff, 0xff, 0xb1, 0xb1, 0xff, 0xff, 0xb1, 0xb1,
                          0x00, 0x00, 0x00, 0x00, 0x00, 0x7b, 0x00, 0x7b,
                          0xff, 0xff, 0xb1, 0xb1, 0x00, 0x00, 0x00, 0x00};
static double  bbb[32] = {0x00, 0x00, 0x00, 0x00, 0x00, 0x7b, 0x00, 0x7b,
                          0x00, 0x7b, 0x00, 0x7b, 0xff, 0xff, 0xb1, 0xb1,
                          0xff, 0xff, 0xb1, 0xb1, 0xff, 0xff, 0xb1, 0xb1,
                          0xff, 0xff, 0xb1, 0xb1, 0x00, 0x00, 0x00, 0x00};
static int     rrggbb[8] = {4, 6, 2, 3, 1, 5, 7, 0};
static double  y, u, v, k;

FILE *logfp;

int main()
{
    printf("4 bit RGB to YUV signal level calculation program\n");
    printf("                            (C) Oguchi R&D  2022\n\n");

    // Check & specify file I/O
    if (fopen_s(&logfp, outfile, "w"))
    {
        printf("Output file %s open error...\n", outfile);
        exit(0);
    }

    // Start calculation for Brightness
    for (rgb = 7; rgb > -1; rgb--)
    {
```

```
        fprintf(logfp, "%03d\n", rgb);
        for (attrib = 15; attrib > -1; attrib--)
        {
            b = (rgb & 1);
            g = (rgb & 2) >> 1;
            r = (rgb & 4) >> 2;
            k = level[attrib];
            y =  (0.299 * k * r) + (0.587 * k * g) + (0.114 * k * b);
            u = -(0.147 * k * r) - (0.289 * k * g) + (0.436 * k * b);
            v =  (0.615 * k * r) - (0.515 * k * g) - (0.100 * k * b);
            fprintf(logfp, "%03f  ", y);
            fprintf(logfp, "%03f  ", u);
            fprintf(logfp, "%03f\n", v);
        }
    }

    // Start calculation for Hue
    fprintf(logfp, "\n\n");
    ii = 0;
    for (j = 0; j < 8; j++)
    {
        fprintf(logfp, "%03d\n", rrggbb[j]);
        for (i = 0; i < 4; i++)
        {
            y = (0.299 * rr[ii] / 255) + (0.587 * gg[ii] / 255) + (0.114 * bb[ii] / 255);
            u = -(0.147 * rr[ii] / 255) - (0.289 * gg[ii] / 255) + (0.436 * bb[ii] / 255);
            v = (0.615 * rr[ii] / 255) - (0.515 * gg[ii] / 255) - (0.100 * bb[ii] / 255);
            fprintf(logfp, "%03f  ", y);
            fprintf(logfp, "%03f  ", u);
            fprintf(logfp, "%03f\n", v);
            ii++;
        }
    }

    // Start calculation for Brightness & Hue Combined
    fprintf(logfp, "\n\n");
    ii = 0;
    for (j = 0; j < 8; j++)
    {
        fprintf(logfp, "%03d\n", rrggbb[j]);
        for (i = 0; i < 4; i++)
        {
            y = (0.299 * rrr[ii] / 255) + (0.587 * ggg[ii] / 255) + (0.114 * bbb[ii] / 255);
            u = -(0.147 * rrr[ii] / 255) - (0.289 * ggg[ii] / 255) + (0.436 * bbb[ii] / 255);
            v = (0.615 * rrr[ii] / 255) - (0.515 * ggg[ii] / 255) - (0.100 * bbb[ii] / 255);
            fprintf(logfp, "%03f  ", y);
            fprintf(logfp, "%03f  ", u);
            fprintf(logfp, "%03f\n", v);
            ii++;
        }
    }

    // End calculation
    printf("RGB to YUV calculation completed\n");

    fclose(logfp);
}
```

Key matrix

Key inputs	Scan signals				
	A12	**A11**	**A10**	**A9**	**A8**
B9	---	Push 1	Push 3	---	---
B10	---	Push 2	Push 4	---	---
B11	Slide 5	---	---	---	Option
B12	Slide 4	---	---	---	Select
B13	Slide 3	---	---	Toggle 1 (Left)	Toggle 2 (Left)
B14	Slide 2	---	---	Toggle 1 (Right)	Toggle 2 (Right)
B15	Slide 1	---	---	---	Start

Connection Between Cassette Ports & µPD777 I/O Pins

Product name	Cassette output ports					Cassette input ports										
	Scan signals					Paddle related				Key related						
	A12	A11	A10	A9	A8	B5	B4	B3	B2	B9	B10	B11	B12	B13	B14	B15
	See table above					UR	LR	LL	UL	See table above						
µPD777-005 (#1 Yosaku)	---	S2/	S2/	S1/	S1/	---	---	---	---	K7/	K6/	---	K4/	K3/	K2/	K1/
µPD778 (#2 Baseball)	S2/	---	S2/	---	S1/	---	PD1	---	---	K7/	K6/	K5/	K4/	K3/	K2/	K1/
µPD777-007 (#3 Galaxian)	---	S1/	S1/	S1/	S1/	---	---	---	---	K6/	K6/	K5/	K4/	K3/	K2/	K1/
µPD777-004 (µPD777 #4 Big Sports)	---	---	---	---	S1/	PD4	PD3	PD2	PD1	---	---	---	K4/	---	---	K1/
µPD774 (#5 Battle Vader)	---	S2/	S2/	S1/	S1/	---	---	---	---	K7/	K6/	---	K4/	K3/	K2/	K1/
µPD777-008 (#6 Pakpak Monster)	---	S1/	S2/	---	S1/	---	---	---	---	K2/	K3/	---	K4/	---	---	K1/
µPD777-009 (#8 Monster Mansion)	---	S2/	S2/	S1/	S1/	---	---	---	---	K7/	K6/	K5/	K4/	K3/	K2/	K1/
µPD777-010 (#9 Astro Command)	---	S2/	S2/	S1/	S1/	---	---	---	---	K7/	K6/	K5/	K4/	K3/	K2/	K1

SW1 Switch Positions vs. Games

Game Product Name	SW1 (Key Scan Signal Switch)											
	Slide Position					S2/			S1/			
	1	2	3	4	5	6	7	8	9	10	11	12
μPD777-005 (#1 Yosaku)	0	0	0	0	0	0	1	1	0	0	1	1
μPD778 (#2 Baseball)	1 out of five					1	0	1	0	0	1	1
μPD777-007 (#3 Galaxian)	0	0	0	0	0	0	0	0	1	1	1	1
μPD777-004 (μPD777) (#4 Big Sports)						0	0	0	0	0	1	0
μPD774 (#5 Battle Vader)						0	1	1	0	0	1	1
μPD777-008 (#6 Pakpak Monster)						0	0	1	1	0	1	0
μPD777-009 (#8 Monster Mansion)						0	1	1	0	0	1	1
μPD777-010 (#9 Astro Command)						0	1	1	0	0	1	1

1: On, 0: Off

Key Function vs. Games

Product Name	Start	Select	Left Toggle		Push		Slide	Push		Right Toggle	
			Left	Right	1	2		3	4	Left	Right
μPD777-005 (#1 Yosaku)	Game Start	Game select	Move Left	Move Right	Jump	Axe	---	Jump	Axe	Move Left	Move Right
μPD778 (#2 Baseball)		---	Batting		---	---	*1 Curve or Straight	Slow Ball	Fast Ball	Batting	
μPD777-007 (#3 Galaxian)		Game select	Move left	Move right	Launch beam Emit jet		---	Launch beam Emit jet		Move Left	Move Right
μPD777-004 (μPD777) (#4 Big Sports)		Game select	---	---	---	---	---	---	---	---	---
μPD774 (#5 Battle Vader)		Game select	Move Left	Move Right	Launch Missile		---	Launch Missile		Move Left	Move Right
μPD777-008 (#6 Pakpak Monster)		Game select	---	---	Move Left	Move Right	---	Move Up	Move Down	---	---
μPD777-009 (#8 Monster Mansion)		Game select	Move Left	Move Right	Move Up	Move Dow n	---	Move Up	Move Down	Move Left	Move Right
μPD777-010 (#9 Astro Command)		Game select	Move Up	Move Down	Launch Missile	Move Fast	---	Launch Missile	Move Fast	Move Up	Move Down

Slide Switch Position (*1 Curve or Straight)				
1	2	3	4	5
Left curve (Ball zone)	Left curve (Strike zone)	Straight	Right curve (Strike zone)	Right curve (Ball zone)

Paddle Function vs. Games

Product Name	Left Paddle		Right Paddle	
	Upper	Lower	Upper	Lower
μPD778 (#2 Baseball)	---	---	---	Move Outfielders
μPD777-004 (μPD777) (#4 Big Sports)	Red		Blue	
	Long	Short	Long	Short
Others	---	---	---	---

Video Files Generated and Recorded by "777 to YUV" System

Files below introduce clear and crisp NEC μPD777 game videos by 1280 x 720 HD resolution.

(1) #1 Yosaku (μPD777-005)
(2) #2 Baseball (μPD778)
(3) #3 Galaxian (μPD777-007)
(4) #4 Big Sports 12 (μPD777)
(5) #5 Battle Vader (μPD774)
(6) #6 Pakpak Monster (μPD777-008)
(7) #8 Monster Mansion (μPD777-009)
(8) #9 Astro Command (μPD777-010)

NEC μPD777 Related PDF Files (Extracted)

- 777 Design Note
- μPD777 On-chip ROM Code Dump System Design
- Epoch Cassette Vision Cartridge
- Anatomy of Cassette Vision